PRACTICAL NO.1

CARPENTRY SHOP

INTRODUCTION:

Carpentry may be defined as the process of making wooden components. It starts from a marketable form of wood and ends with a finished product. It Deals with the building work, furniture, cabinet marking, etc., joinery, i.e., preparation of joints are one of the important operations in all wood-works.

TIMBER

Timber is the name given to the wood obtained from well-grown trees. The trees are cut into various sizes. The wood grain as applied to wood refers to the appearance or pattern of the wood on the cut surfaces the grains of the wood are of fibrous structure and to make them strong the timber must be cut in such a way that the grains run parallel to the length.

COMMON VERIETIES OF TIMBER

1. **Babul:** This wood is pale red to brown in colour, closed grain, hard and tough but elastic and Take good polish. It is used for the bodies and the wheel of the carts, agricultural implements, tool handles etc.

2. **Deodar:** It grows on the hill. It is strong and durable and is used in building houses and for railway sleepers. It is light in colour and closed well marked grains.

3. **Kail:** It grows in Himalayas and yield a closed grained, moderately hard and durable wood .It is used in the same way as deodar.

4. **Mango:** It grows all over the India. It is of inferior quality, coarse and open grained and of deep grey colour. It decay rapidly when exposed to water and readily eaten by ants .it is used for common doors, windows and inferior quality furniture.

5. **Teak:** This wood is brown in colour straight grains, very strong and durable yet light and easily worked. It takes a smooth polished. Teak is grown in the central part of India and suitable for all carpentry and joinery works.

CARPENTRY TOOLS

1. MEASURING TOOLS

Steel Rule:-
It is made up of stainless steel and it is marked with scales.

2. MARKING TOOLS

2.1. Try Square: -

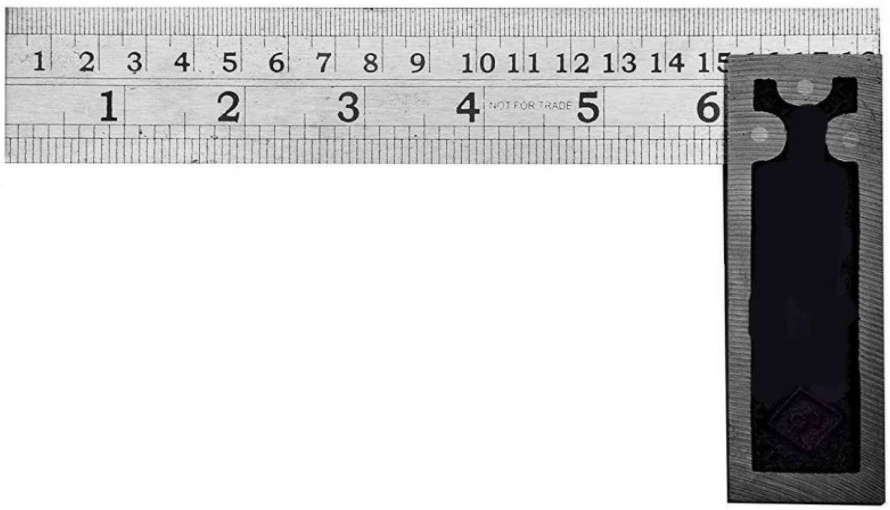

It is used for checking squareness of two surfaces. It consists of a blade made up of steel, which is attached to base at 90deg .The base is made up of cast iron or steel. Try square is also used for marking right angles and measuring straightness of surfaces.

2.2 Marking Gauge: --

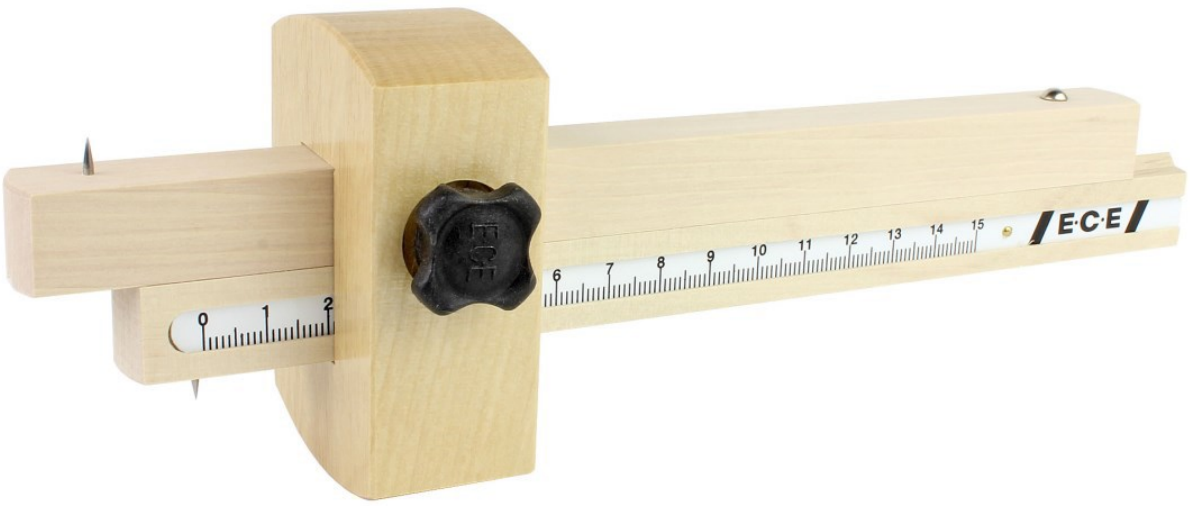

It is used to draw parallel lines. The movable portion of the gauge is adjusted to suitable position and is tightened on the stem.

3. HOLDING TOOLS

These are the tools used to hold the work piece on operations to be done.

3.1 Carpenter Vice

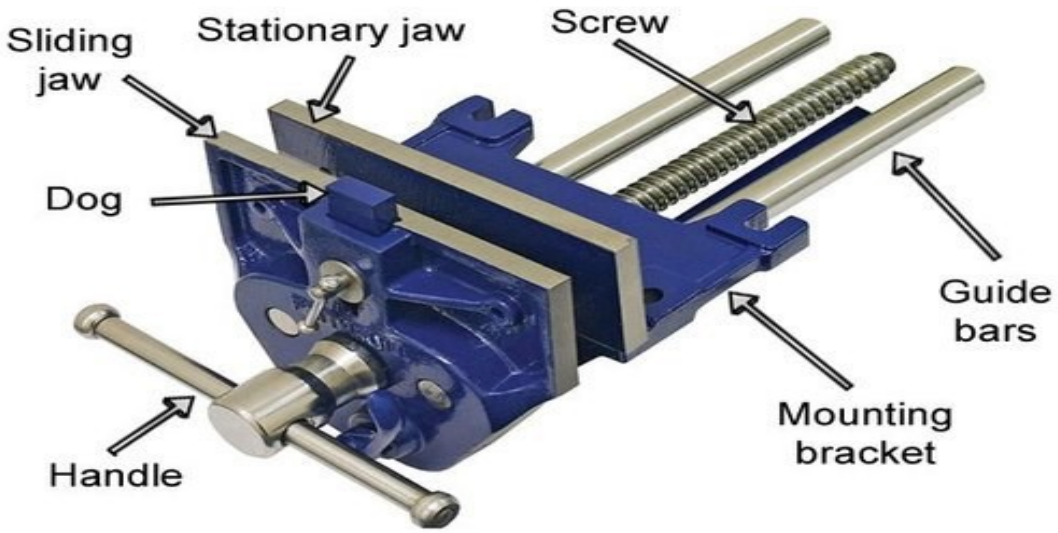

Figure shows the carpenters Bench Vice, used as a work holding device in a carpenter shop. Its one jaw is fixed to the side of the table while the other jaw is movable by means of a screw and a handle. The jaws are lined with hard wooden faces.

4. PLANNING TOOLS

Planning is the operation used to produce flat surfaces on wood. A plane is hand tool used for the purpose. The cutting blade used in a plane is very similar to chisel. The Blade of a plane is fitted in wooden or metallic block, at an angle.

4.1. Metal Jack plane

It is the most commonly used general purpose plane. It is above 35cm long. The cutting iron (blade) should have a cutting edge of slight curvature. It is used for quick removal of material on rough work and is also used in oblique planning.

5. CUTTING TOOLS

5.1. Saws

A saw is used to cut wood into pieces .there are different types of saws, designed to suit different purposes .a saw is specified by the length of its toothed edge. CARPENTRY SHOP Page 5

5.1.1 Cross- cut / Hand saw

It is used to cut across the grains of the stock. The teeth are so set that the saw kerfs will be wider than the blade thickness. This allows the blade to move freely in tie cut without sticking.

6.1. Chisels:

Chisels are used for cutting and shaping wood accurately. Wood chisels are made in various blade widths, ranging from 3 to 8 mm. They are also made into tang type, having a steel shank which fits inside the handle. These are made of forged steel or tool steel blades.

6.1.1: Firmer Chisel:

The word ‘firmer’ means ‘stronger’ and hence firmer chisel is stronger than other chisels. It is a general purpose chisel and is used either by hand pressure or by a mallet. The blade of a firmer chisel is flat, as shown in fig.

7. DRILLING AND BORING TOOLS:

7.1 Hand Drill:

Carpenter’s brace is used to make relatively large size holes; whereas hand drill is used for drilling small holes. A straight shank drill is used with this tool. It is small, light in weight and may be conveniently used than the brace. The drill bit is clamped in the chuck at its end and is rotated by a handle attached to gear and pinion arrangement.

8. STRIKING TOOLS

8.1 Cross pein hammer

It is made of forged high carbon steel. It has a face, peen and a handle. The handle is made of bamboo and fitted tightly in the eye with help of a wedge to avoid any slip out when in use. These hammers are identified by weight which ranges from 100 gm to 500 gm.

8.2 Mallet:

It has a flat a striking face which is used to give light blows to tools having wooden handle like chisel. It is made of hard wood and is round or rectangular in cross-section.

9. Miscellaneous Tools:
9.1 Screw Driver:

It is used for driving wood screws into wood or unscrewing them. The screw driver of a carpenter is different from the other common types, as shown in Fig. The length of a screw driver is determined by the length of the blade. As the length of the blade increases, the width and thickness of the tip also increase.

9.2 Wood Rasp File:

A rasp is principally used for the preliminary rough shaping of wood which is later finished with a plane, a file, a sanding stick, or sandpaper. The rasp removes wood very quickly without a risk of tear out. A rasp has a handle and a bar of steel with teeth. The teeth are coarse for quick removal of wood.

Differences between Wood File and Metal File.

BASIS FOR DIFFERENCES	WOOD FILE (RASPS)	METAL FILE (MILL FILE)
Clogging tendency	Very less (file that has filled with wood chips)	Very high(file that has filled with metal chips/particles)

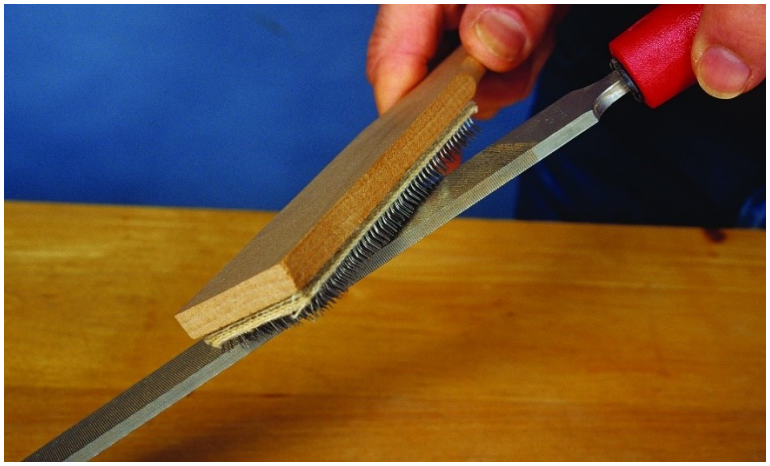

JAIDEV EDUCATION SOCIETY'S
J D COLLEGE OF ENGINEERING AND MANAGEMENT
KATOL ROAD, NAGPUR
Affiliated to Dr. Babasaheb Ambedkar Technological University, Lonere
Website: www.jdcoem.ac.in E-mail: info@jdcoem.ac.in
An Autonomous Institute, with NAAC "A" Grade

Education to Eternity

।।ज्ञानम् सर्वार्थ साधनम्।।

Session: 2022-23

FIRST YEAR SEM-II (Regular)

B. Tech. Branch (AI, CSE, IT, DS)

Job Drawing – Carpentry Shop

Name of the job: To make a cross Lap joint

Require Tools and Equipments: hand Saw, Ballpein Hammer, Tri-Sqaure, Jack Plane, Cold Chisel, Mallet, C-Clamp, Carpentry Vice, Nails, Fevicol, Measuring scale, Oil Stone.

Raw material: Teak wood block: length x width x thickness 110 x 38 x 23 – 2 nos

Job Drawing:

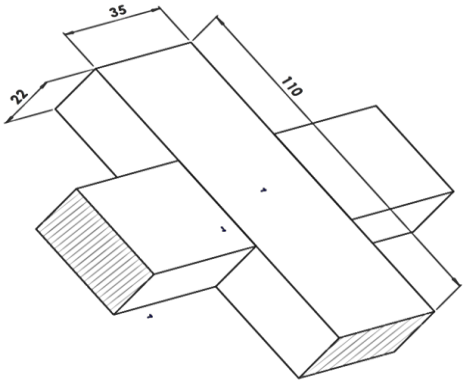

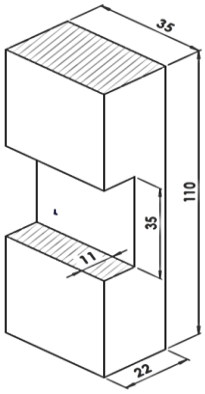

Note: All dimensions are in mm

Scale: Not to scale

Job Operations:

Sr. No.	Operation Name	Tools Require
1	Planning	Jackplane
2	Cutting	HandSaw
3	Filling	Wood Rasp file
4	Marking	Marking gauge, Steel Rule
5	Cutting	Hand Saw, Chisel, Mallet
6	Finishing	Wood Rasp file

NAME OF THE SHOP :- Carpentry Shop

NAME OF THE JOB :- To make a cross Lap joint

MATERIAL REQUIRED:- Teak wood block: length x width x thickness 110 x 38 x 23 – 2 nos

TOOLS AND EQPT.REQUIRED:- hand Saw, Ballpein Hammer, Tri-Sqaure, Jack Plane, Cold Chisel, Mallet, C-Clamp, Carpentry Vice, Nails, Fevicol, Measuring scale, Oil Stone.

OPERATION SHEET:-

S.N.	OPERATION	TOOLS REQUIRED	PROCEDURE
1	Measuring	Steel Rule, Try Square , Marking gauge	1. Marking 110 mm measurement on long teak wood material by pencil. 2. Making lines by try square scale on raw wood material on marking.
2	Cutting	Hand saw	1. Cut material from marking by hand saw.
3	Planning	Jackplane	1. Fix job in Carpentry vice & perform planning operation by jack plane.
4	Measuring	Steel Rule, Marking guage	Make marking of 40 mm both side of job maintain length of 35 mm between markings.
5	Marking	Marking gauge	For cutting slot of 11 mm depth. Set distance between marking guage tip & lock plate is 11 mm & mark cutting depth of slot.
6	Cutting	Chisel, Wooden Mallet	Place job in position where observer see marking of slot on the top side of job & it must be supported by carpentry vice benchside. Cutting material within slot marking by chisel & mallet with maximum 2 mm cut.

---	----	---	Follow above procedure for making another part of cross lap joint.
7	Finishing	Wood Rasp file	Finishing Slot surface by wood rasp file to make well fitted cross lap joint.

Result: The Cross Lap Joint is successfully done.